FCPK BYTÓW

ŁAPA DOCISKOWA
MOVING HEAD (HANGE BASE)

LT161

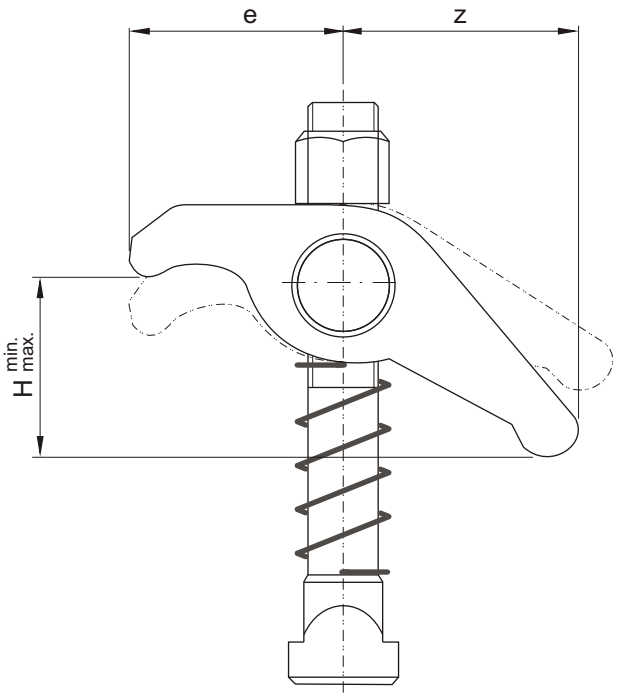

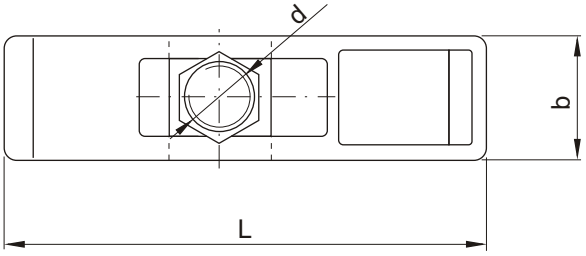

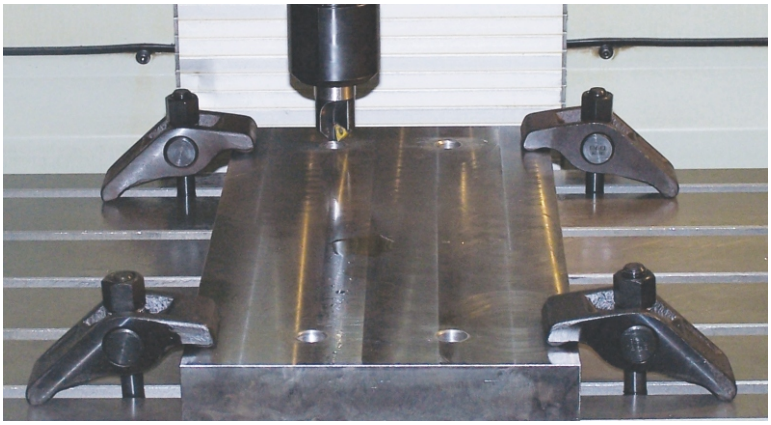

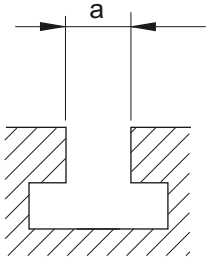

NR KAT.	L	b	e	z	H min - max.	d	a	waga weight [kg]
LT161-10	109	40	48	61	0 - 45	M10	12	0,66
LT161-12						M12	14	0,71
LT161-14	129	50	57	72	0 - 55	M14	16	1,19
LT161-16						M16	18	1,27